All of the Above

Housing in LA at Perkins and Will

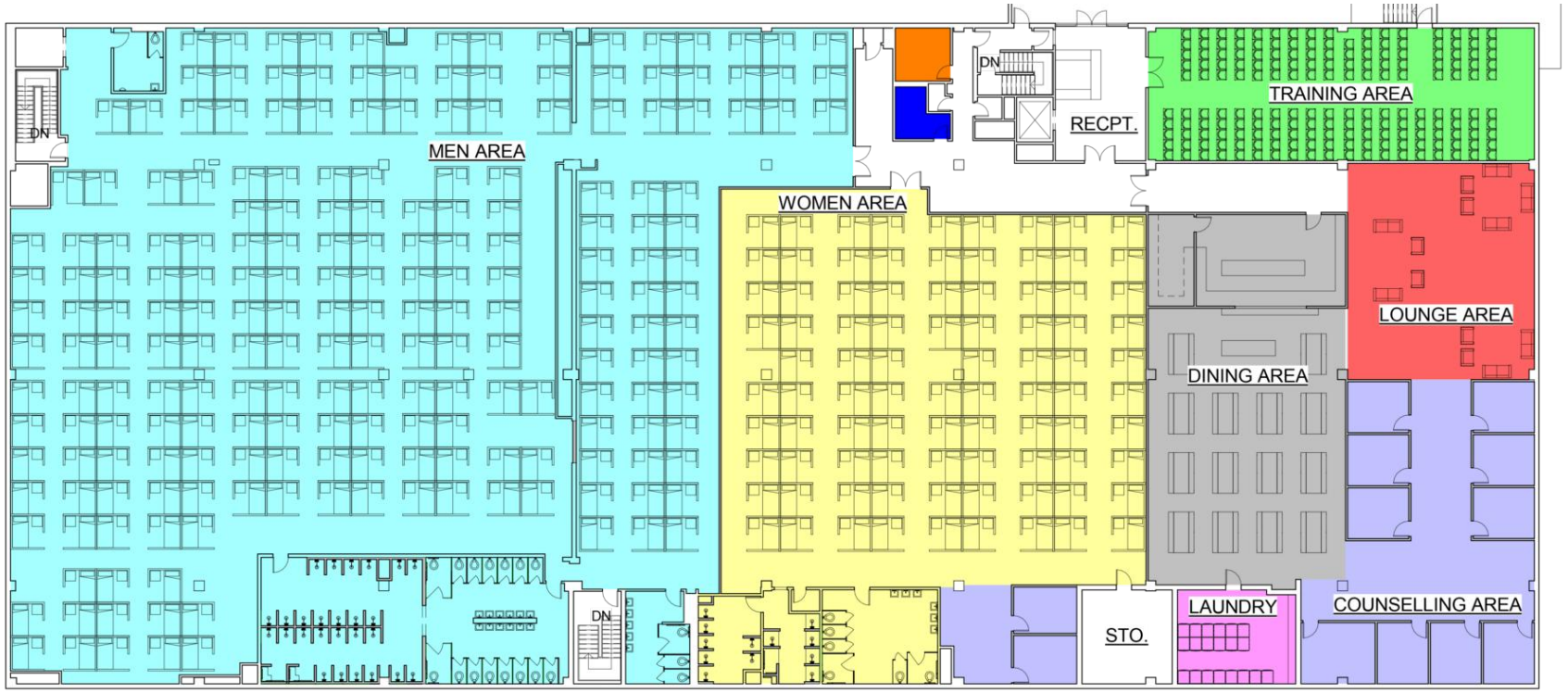

LEGEND

COUNSELLING AREA APPROX. 2890 S.F.	TRAINING AREA APPROX. 1977 S.F.	LAUNDRY AREA APPROX. 422 S.F.
DINING AREA APPROX. 2812 S.F.	MEN AREA 212 BEDS APPROX. 16250 S.F.	HEAT ROOM APPROX. 113 S.F.

A FLOOR PLAN
3/64" = 1'-0"

BLDG. CODE REQUIREMEN

	MEN	WOMEN
	REQ./ PROVIDED	REQ./ PROVIDE
TOILETS (1:15)	15 / 19	6 / 6
SHOWERS (1:8)	26 / 28	11 / 13

Bridge Housing Test Fit - 2018 / LA Bureau of Engineers

Bridge Housing Location

Bridge Housing sites Designed by Perkins and Will

1. 11303 Pershing Avenue Veterans Administration
2. 2817 South Hope Street
3. 515 North Beacon Street
4. 828 Eubank Avenue
5. 310 North Main Street
6. 625 South Lafayette Park Place
7. 5874 Miramonte Street
8. 7600 Tyrone Avenue
9. 682 South Vermont Avenue

Bridge Housing sites by BOE/Others

1. 7621 Canoga Avenue
2. 12860 Arroyo Street
3. 625 S. Lafayette Park Place
4. 1819 South Western Avenue
5. 1403 Gardner Street
6. 100 Sunset Avenue
7. 6965 South St Andrew's Place
8. 1426 Paloma Street
9. 2316 East Imperial Highway
10. 11471 Chandler Boulevard
11. 3248 Riverside Drive
12. 14333 Aetna Street
13. 540 Towne Avenue
14. 2426 East Washington Boulevard
15. 606 East 6th Street
16. 13160 Raymer Street
17. 1533 Schrader Avenue
18. 711 North Alameda Street
19. 1920 West 3rd Street
20. 1215 Lodi Place

Navigation Center Designed by Perkins and Will

A. 2175 South John S. Gibson Boulevard

Navigation Center Designed by BOE/Others

B. 729 W. Manchester Navigation Center
C. 11839 Sherman Way Navigation Center

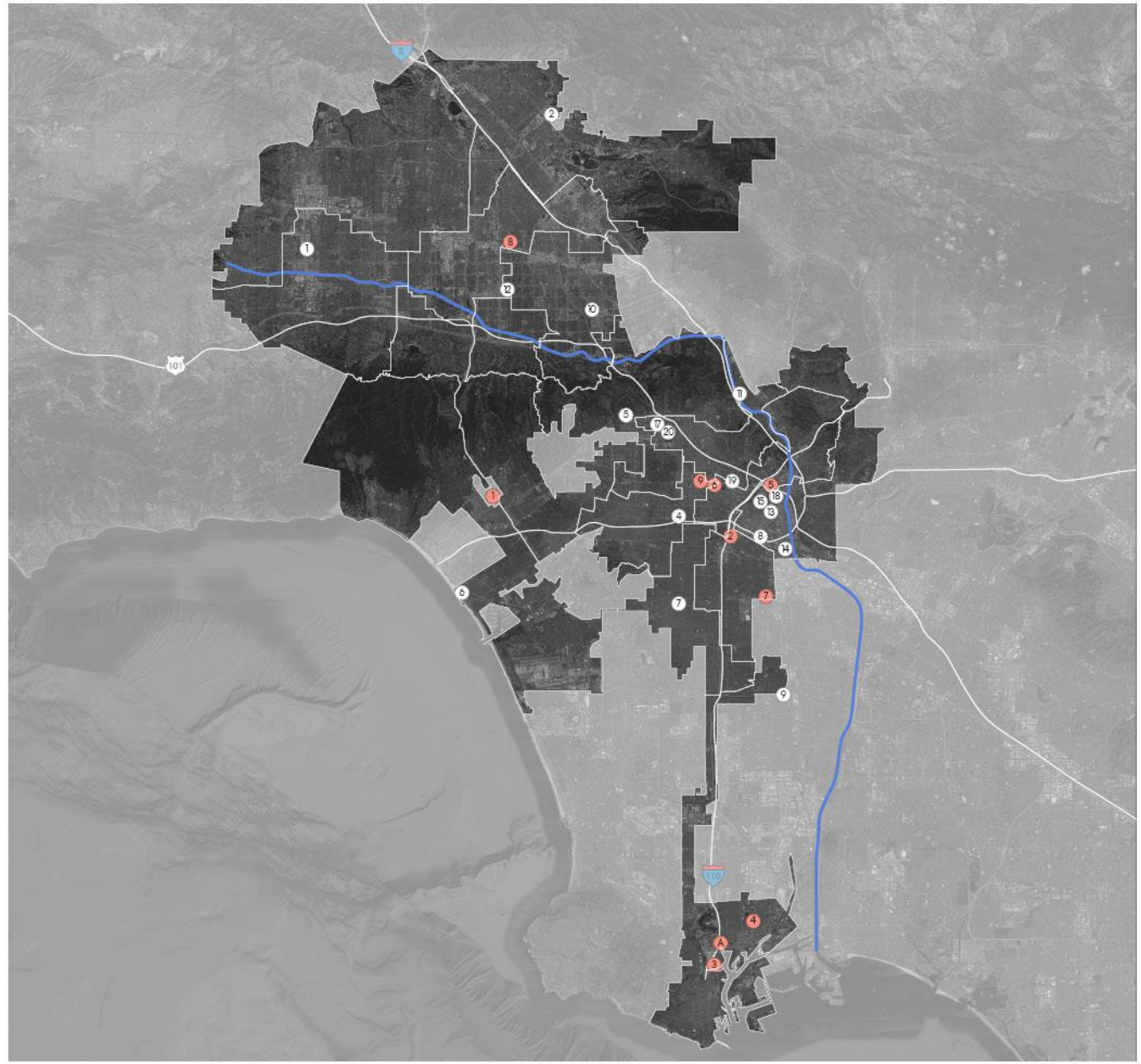

VA West LA Site Diagram

Beacon Street Site Diagram

Eubank Ave Site Diagram

Hope Street Site Diagram

Program Legend

- Entry Gate
- Administration Trailer
- Pet Module
- Dining Canopy
- Access Deck
- Back of House
- Membrane Structure
- Hygiene Trailer

A Bridge Housing Program – Los Angeles

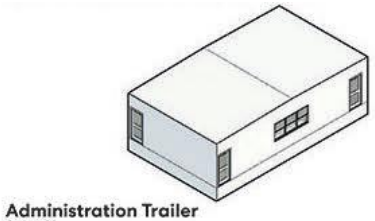

Administration Trailer
24'x40'

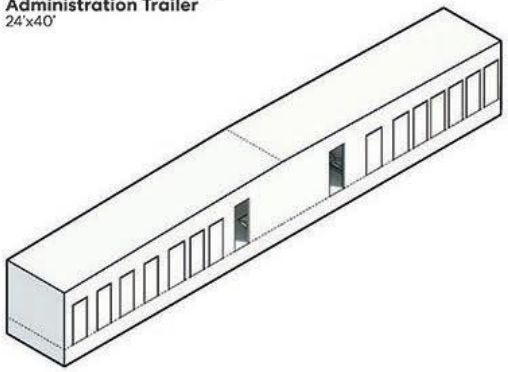

Single Wide Hygiene Trailer
12'x90'

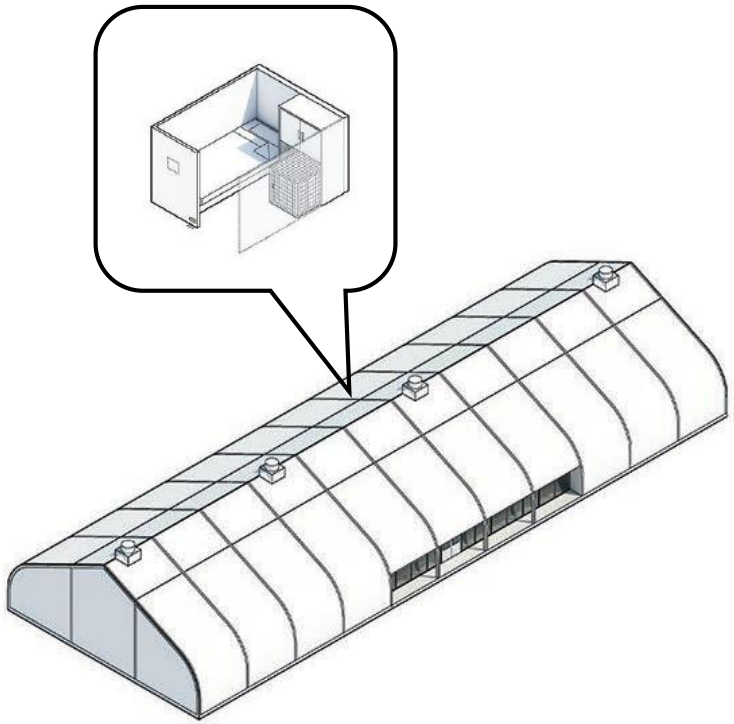

Membrane Structure
60'x165'

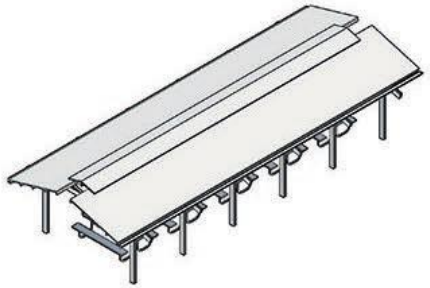

Dining Canopy
50 occupants

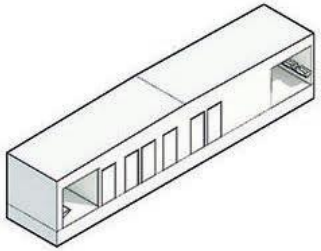

Double Wide Hygiene Trailer
12'x60'

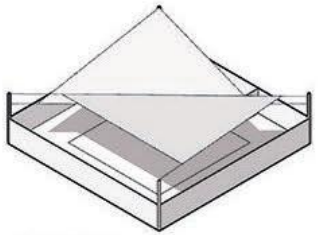

Pet Relief Area
Size adapted per site (approx 500 sqft)

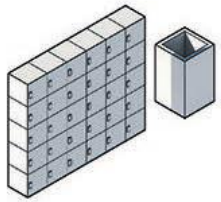

Amnesty Lockers and Personal Storage
1 per occupant

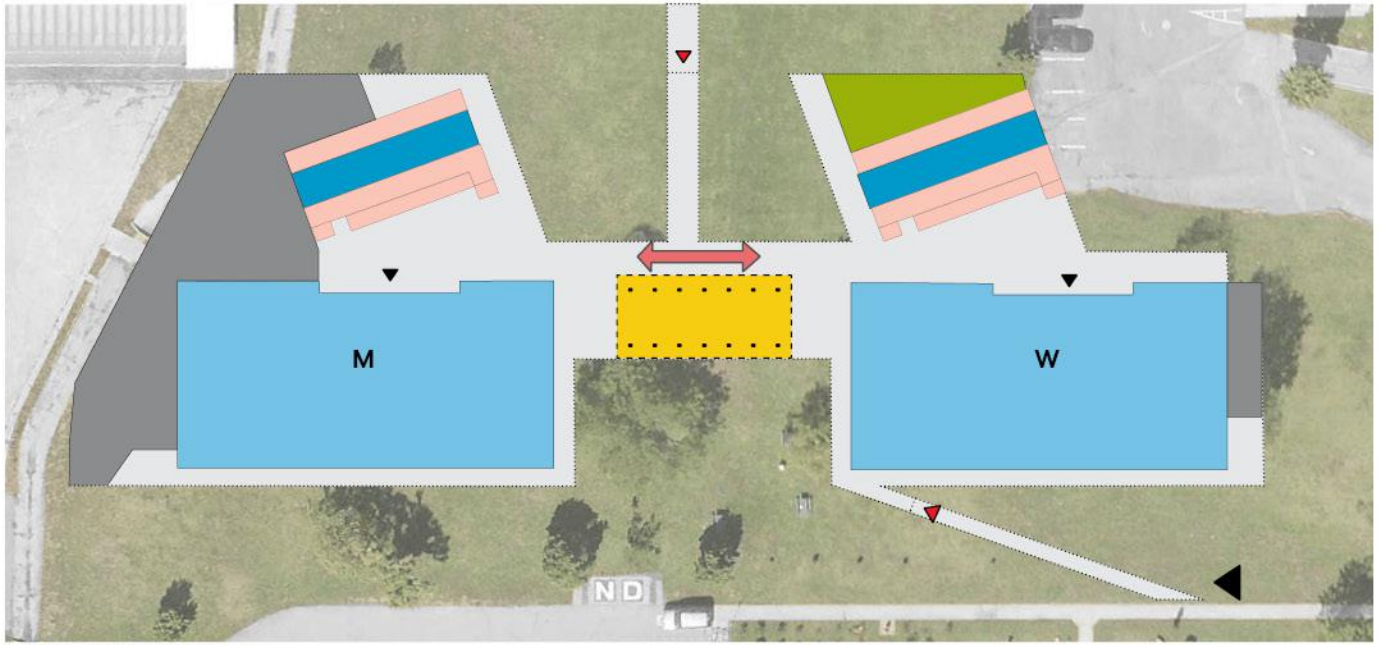

VA West LA Site Diagram

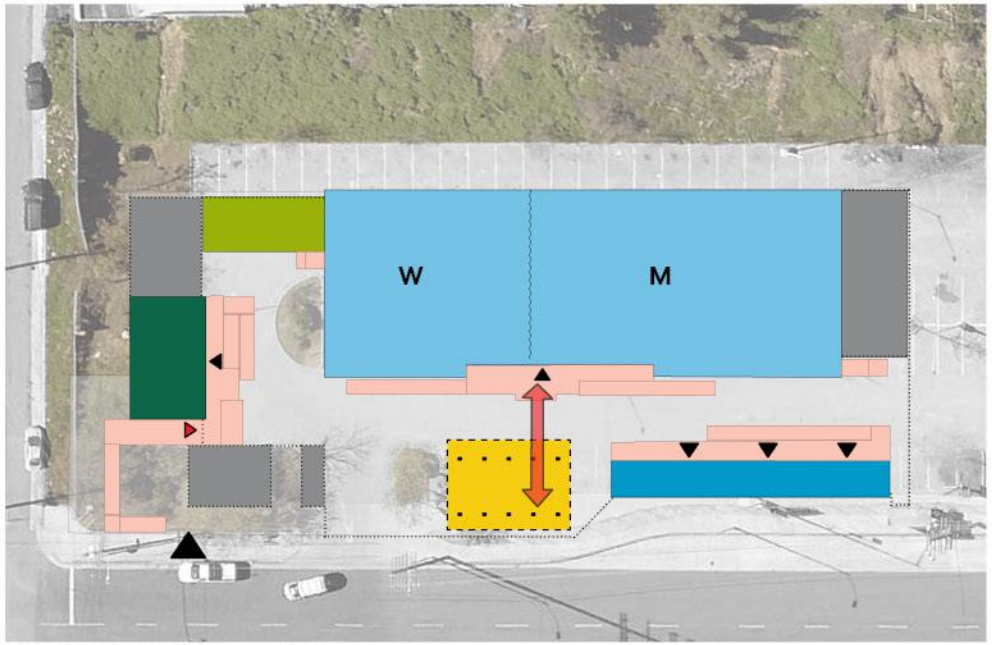

Beacon Street Site Diagram

Program Legend

- Entry Gate
- Administration Trailer
- Pet Module
- Dining Canopy
- Access Deck
- Back of House
- Membrane Structure
- Hygiene Trailer

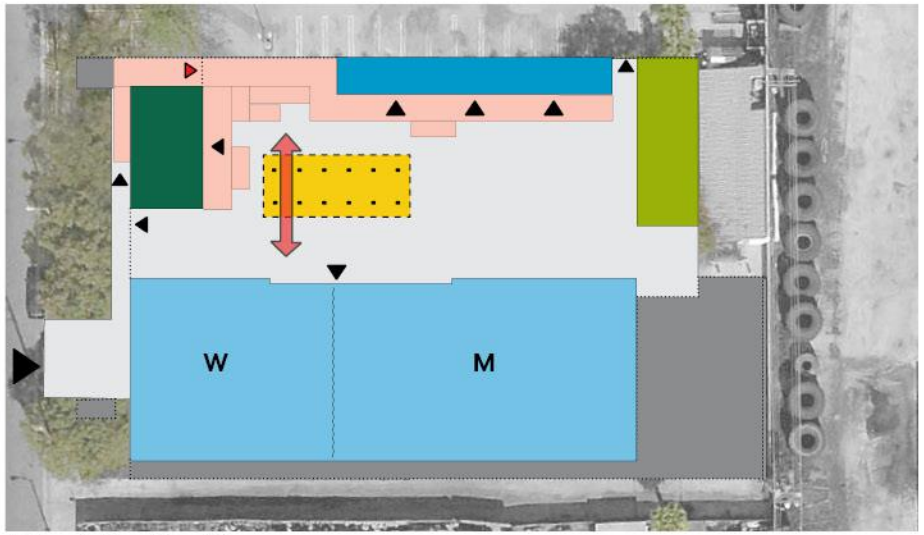

Eubank Ave Site Diagram

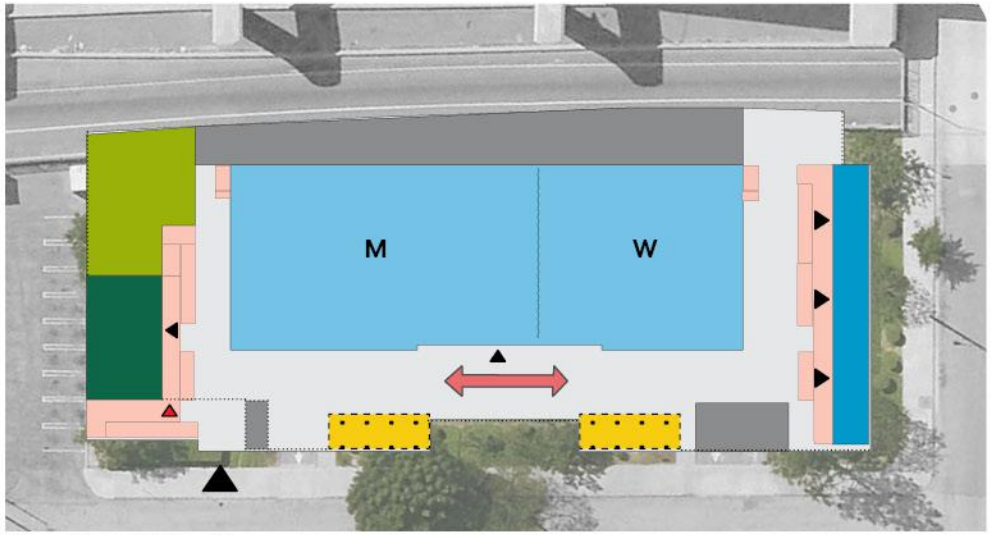

Hope Street Site Diagram

A Bridge Housing Program – Los Angeles

A Bridge Housing Program – Los Angeles

This is Interim Housing

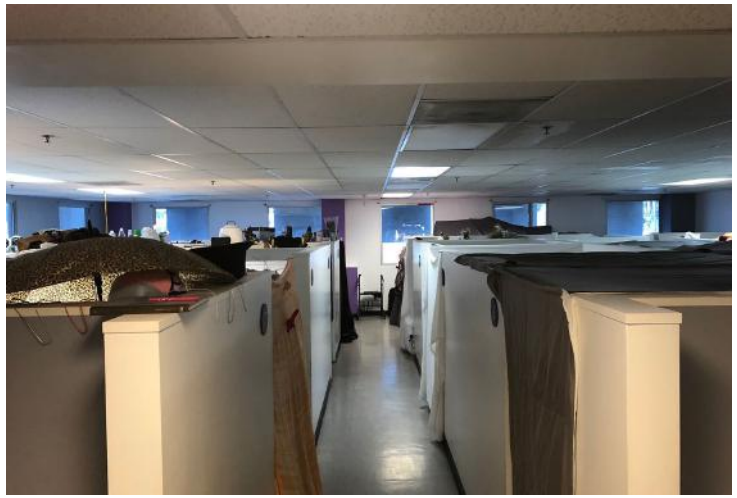

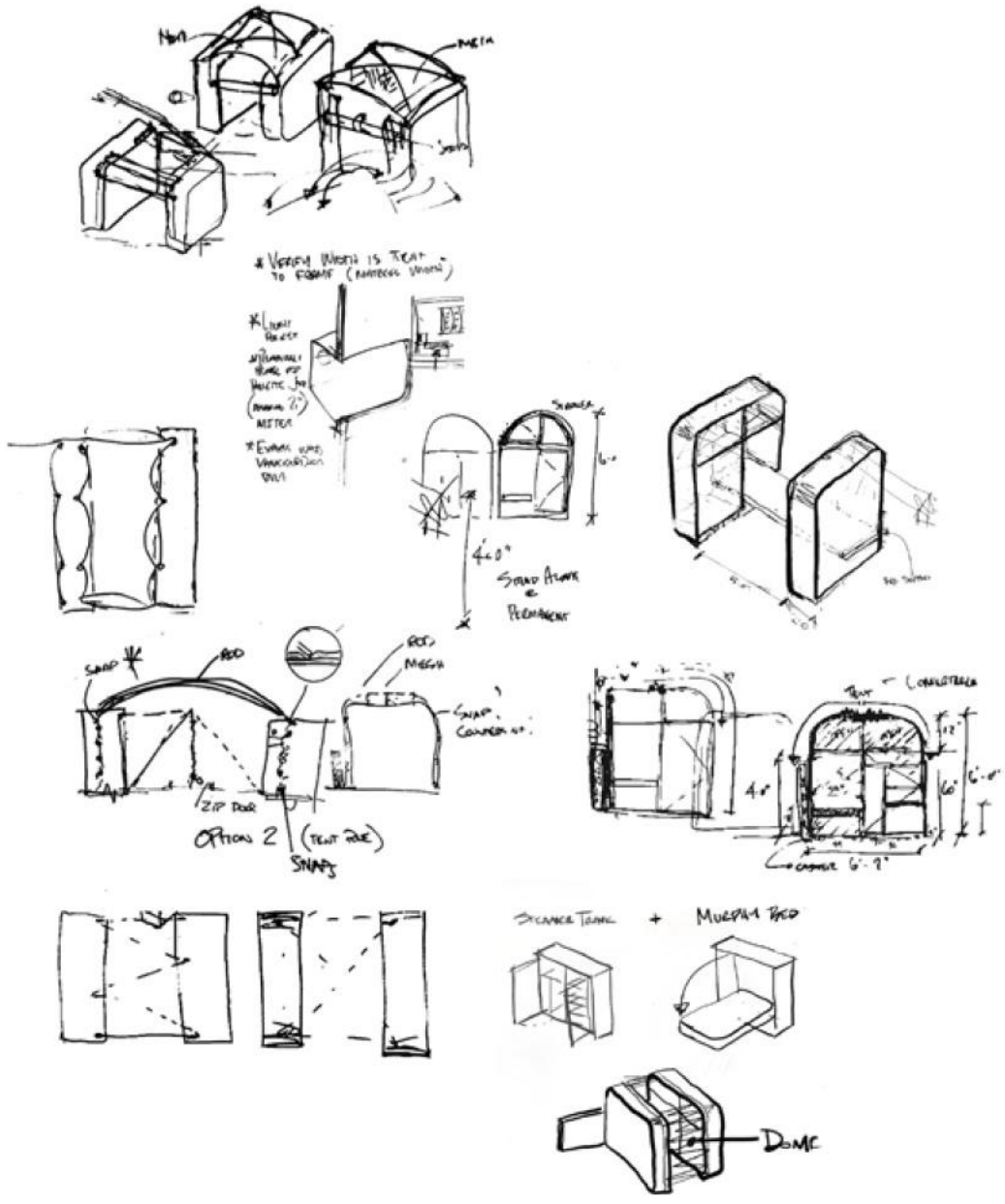
Mesh
Mesh
Stand Alone
Permanent
Snap
Rod
Mesh
Zip Door
Option 2
Snap
Murphy Bed
Dome

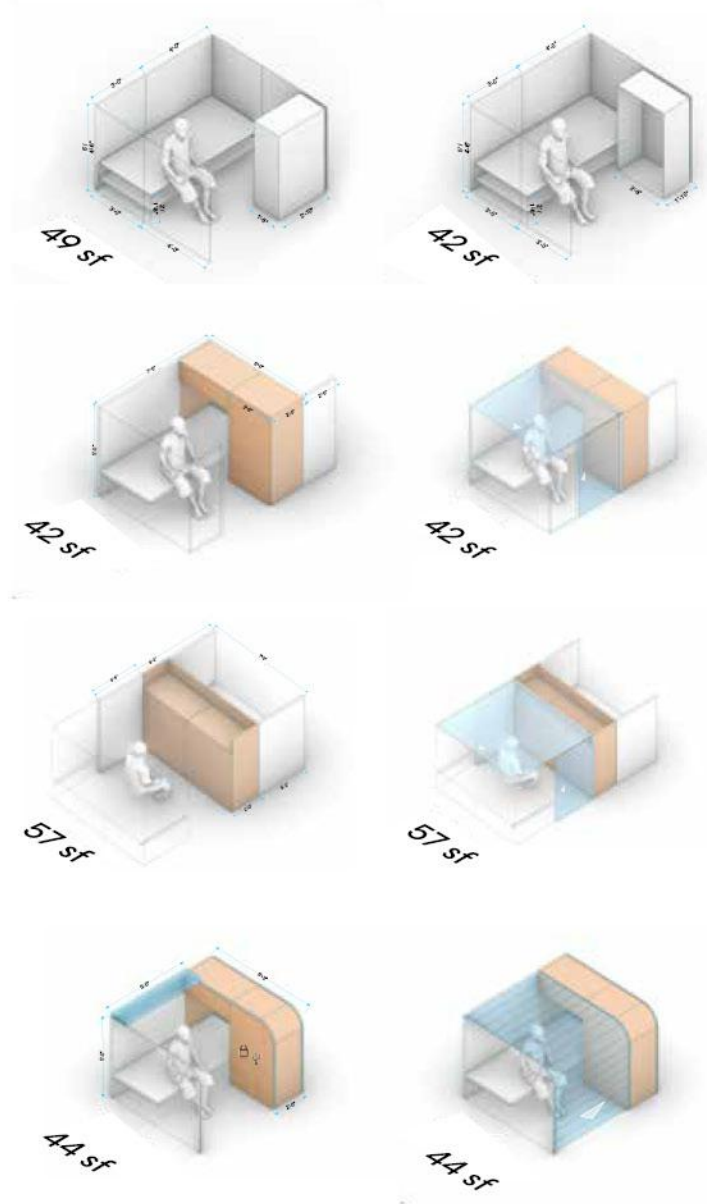
49 sf
42 sf
42 sf
42 sf
57 sf
57 sf
44 sf
44 sf

DOME modular dwelling unit

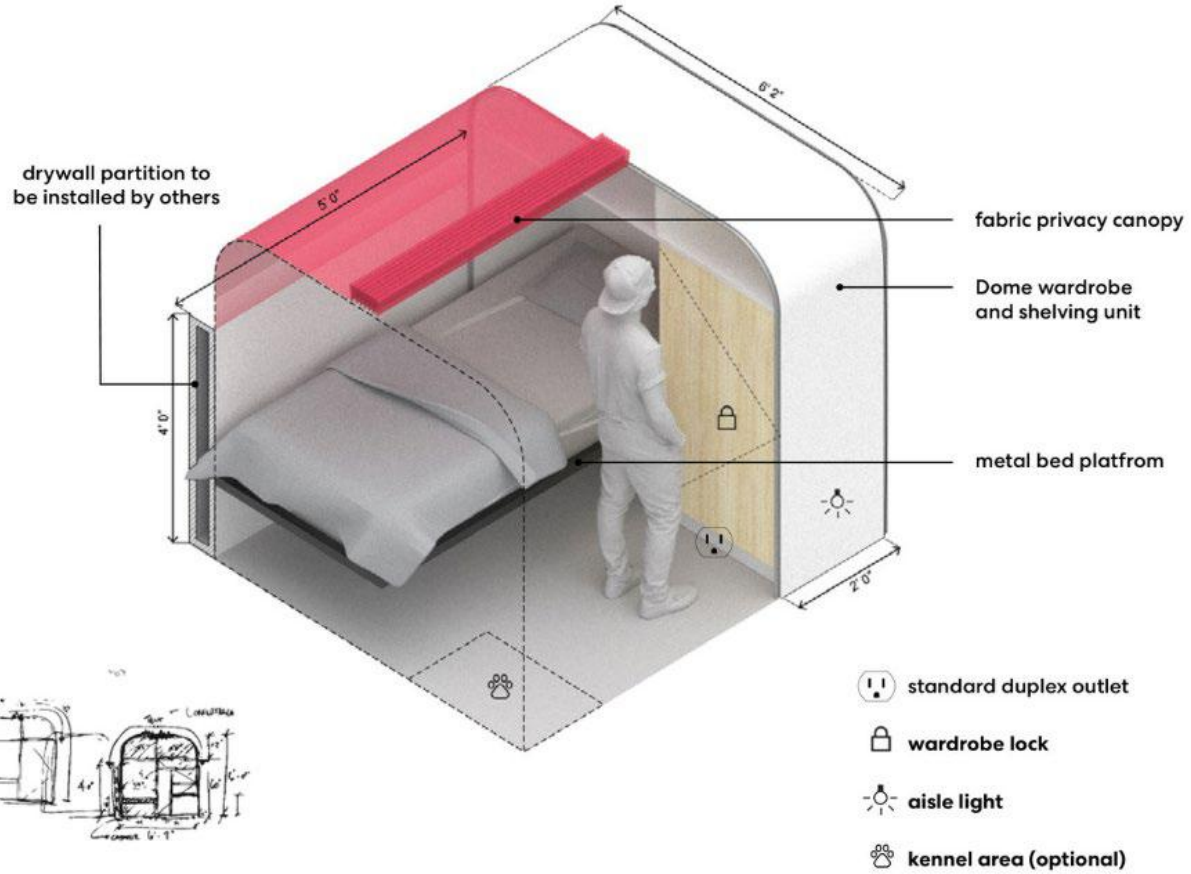

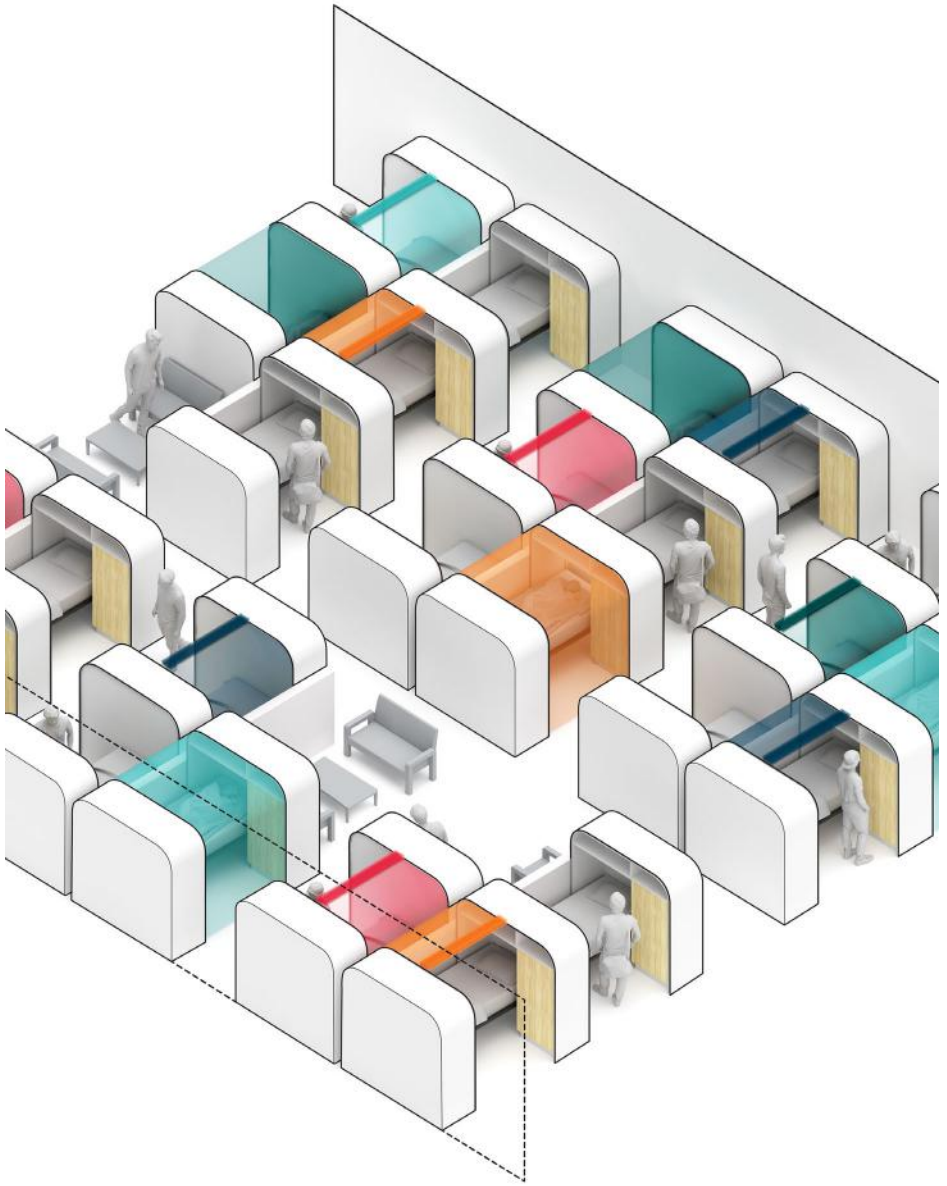

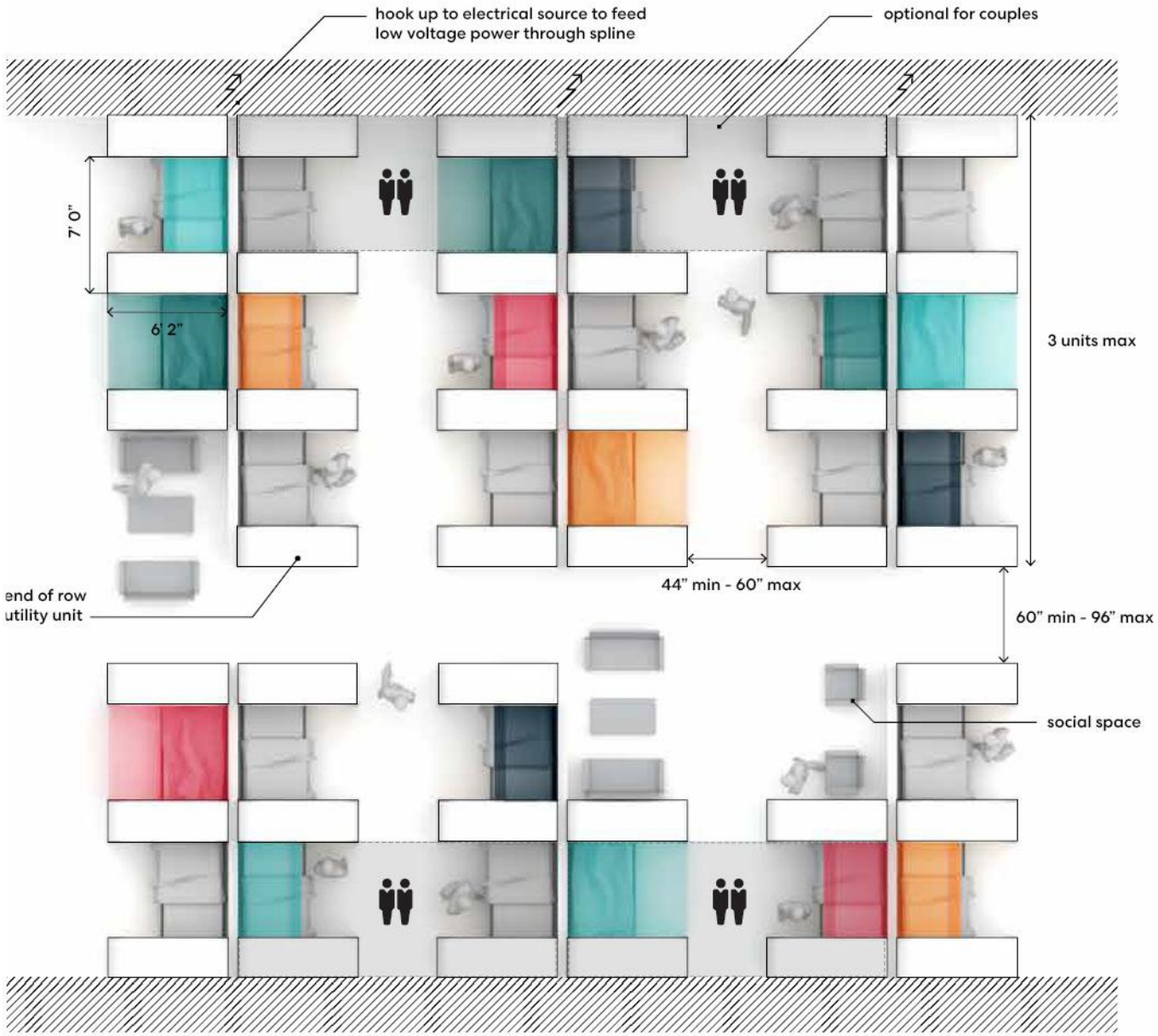
hook up to electrical source to feed
low voltage power through spline
optional for couples
7' 0"
6' 2"
3 units max
44" min - 60" max
60" min - 96" max
end of row
utility unit
social space

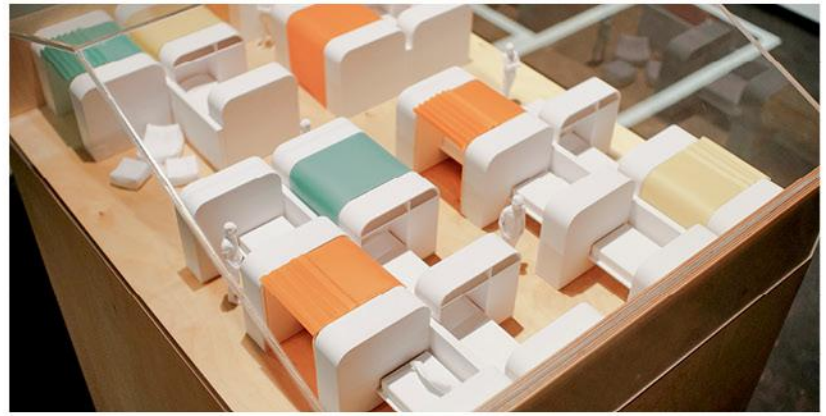

DOME

existing conditions

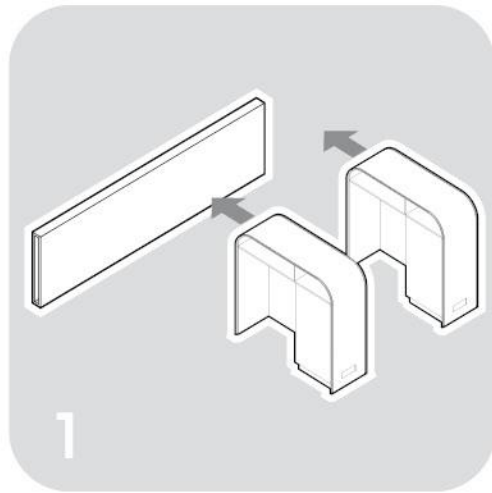

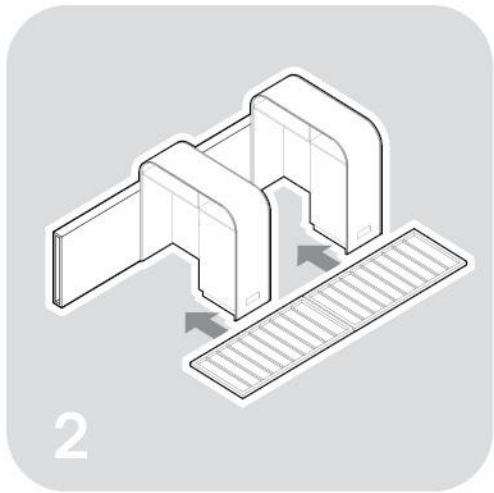

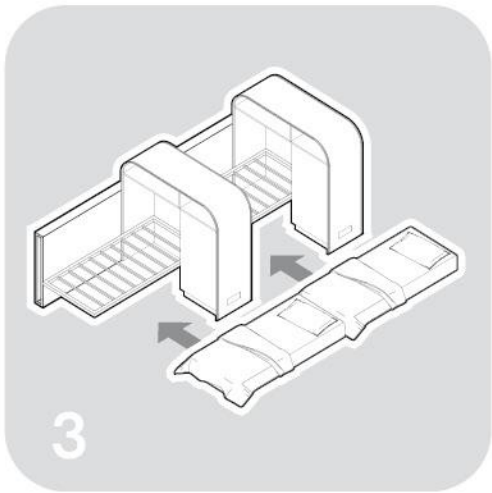

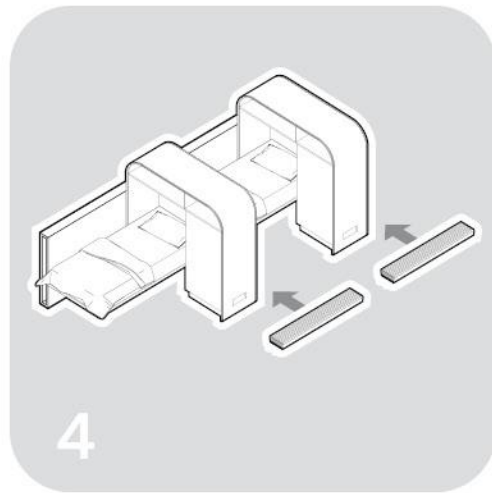

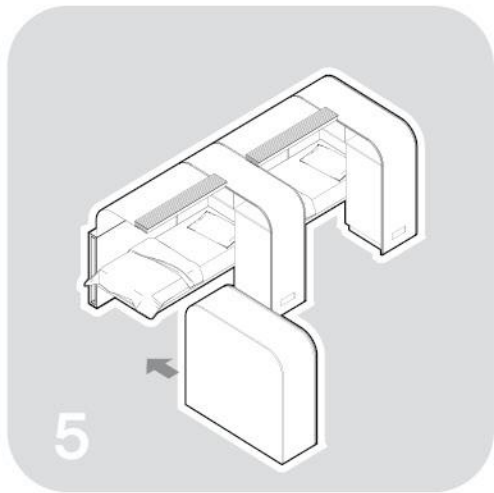

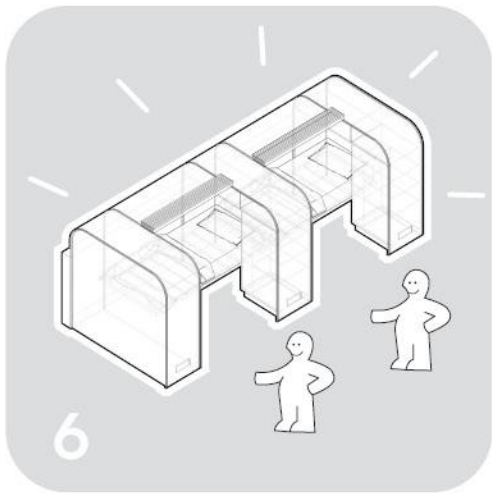

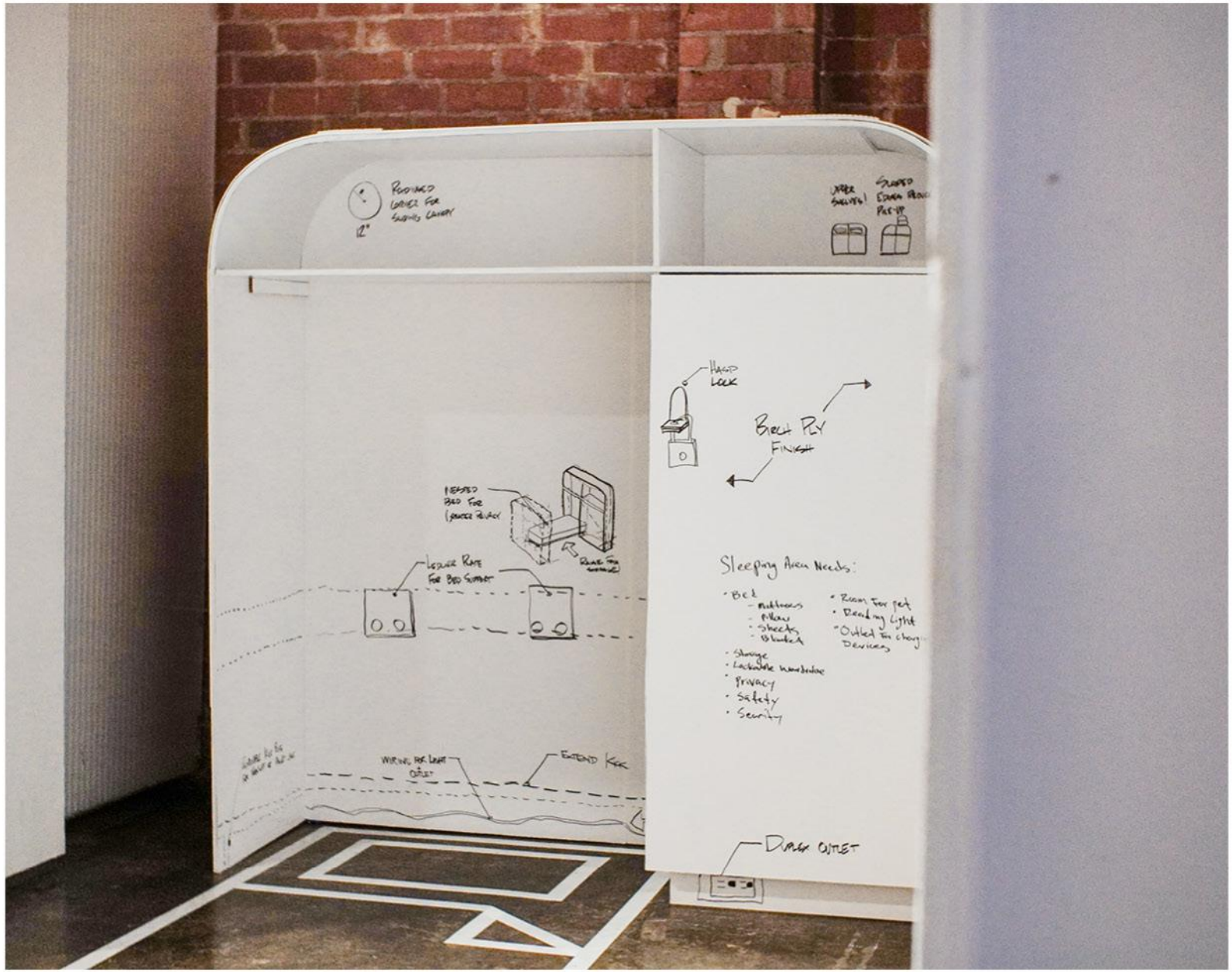
12"
Hasp Lock
Birch Ply
Finish
Sleeping Area Needs:
• Bed
- Mattress
- Pillows
- Sheets
- Blanket
• Storage
• Lockable wardrobe
• Privacy
• Safety
• Security
• Room for pet
• Reading Light
• Outlet for charging Devices
Extend Kick
Duplex Outlet

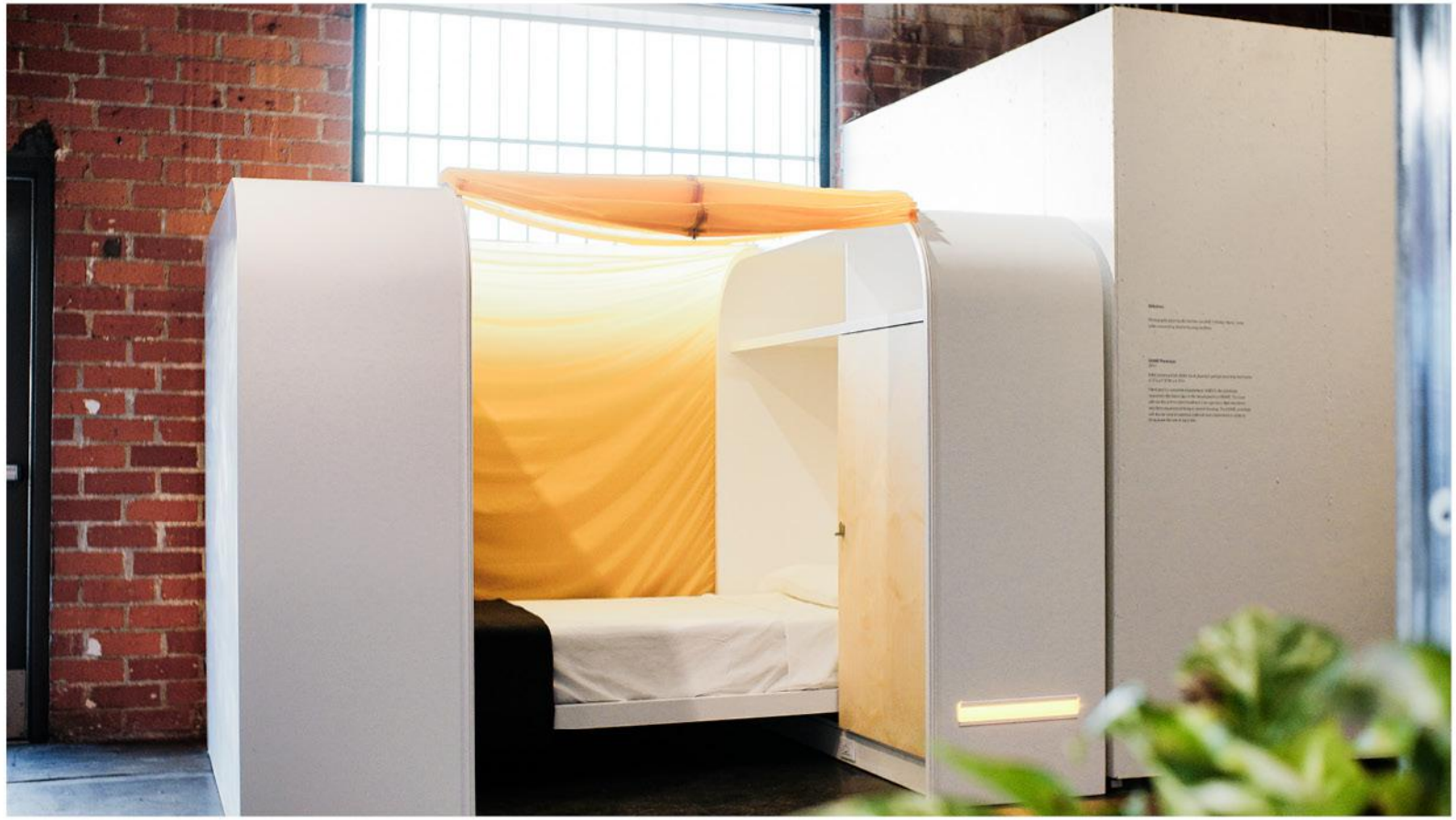

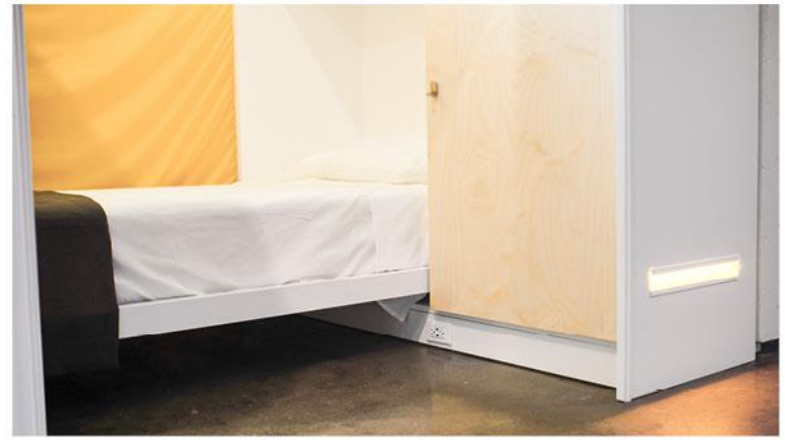

Tiny Homes

Micro Home

Communal Bathroom and Kitchen

Supportive Services in Common Building

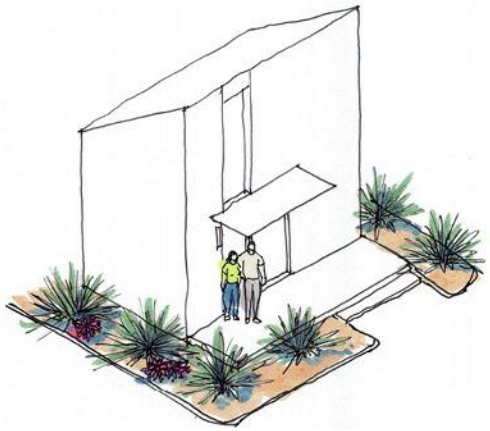

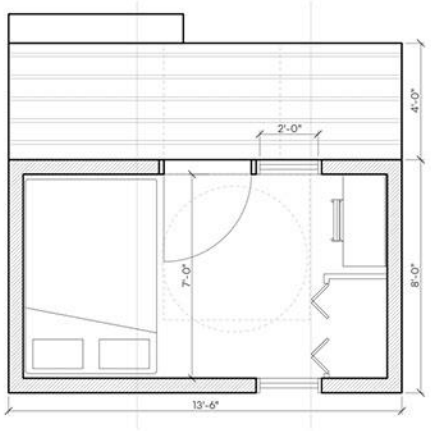

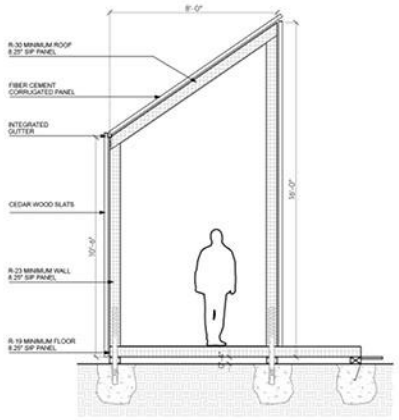

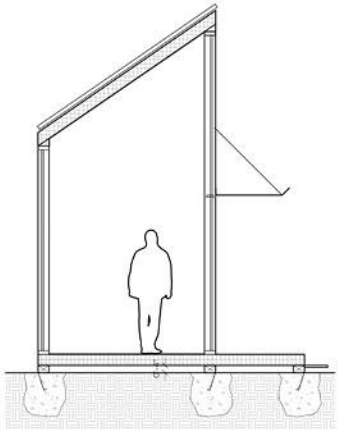

Micro Home

Communial Kitchen and Supportive Services in Common Building

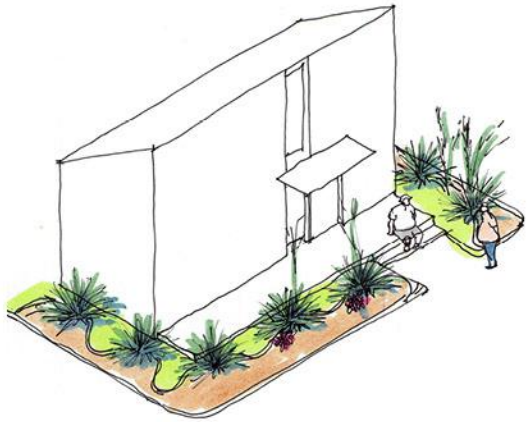

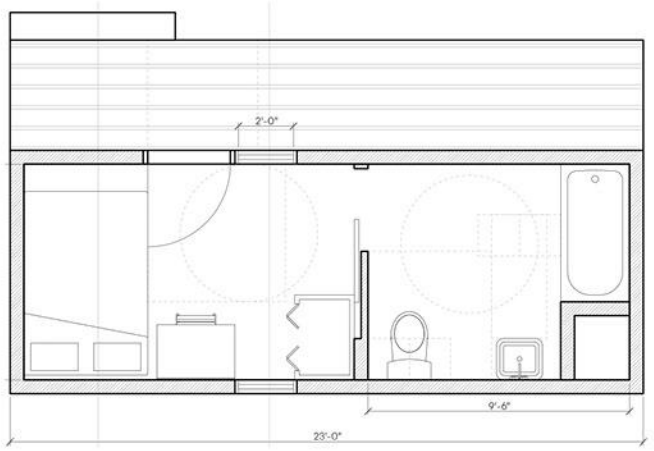

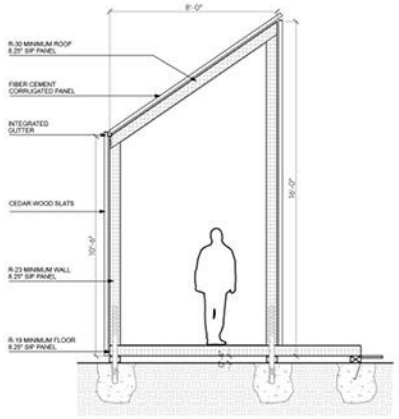

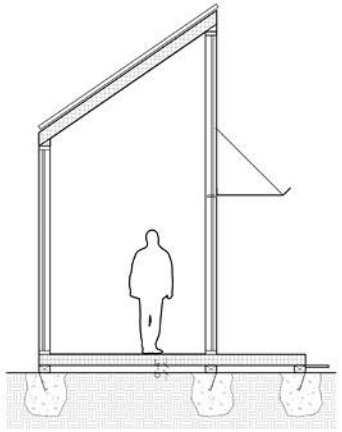

Tiny Homes

Why Flat Pack?

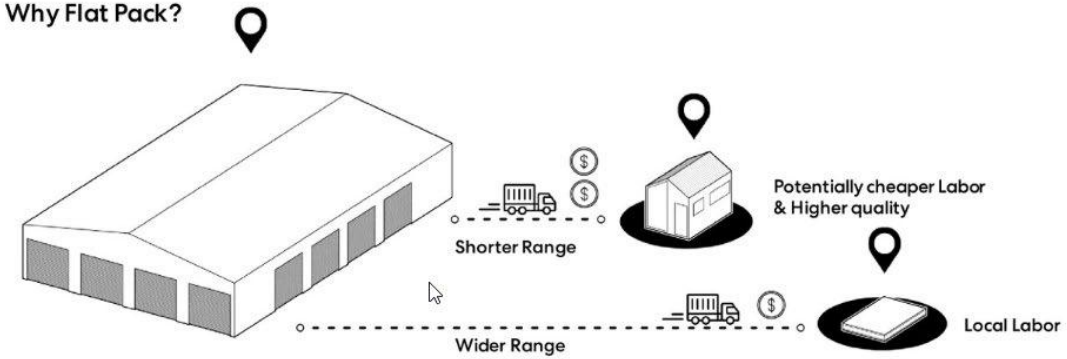

Why SIP?

Performance

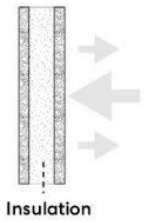

Efficient Insulation with reduced thermal bridging

Assembly

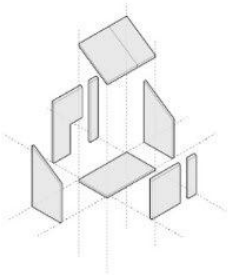

Fewer parts for fast and easy assembly on-site

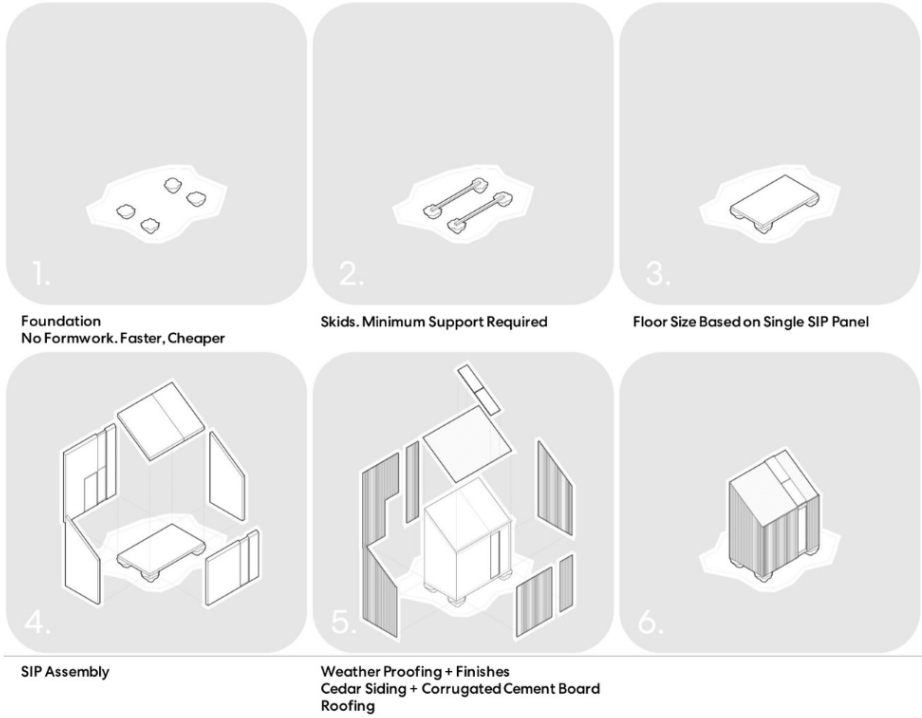

Foundation
No Formwork. Faster, Cheaper

Skids. Minimum Support Required

Floor Size Based on Single SIP Panel

SIP Assembly

Weather Proofing + Finishes
Cedar Siding + Corrugated Cement Board
Roofing

11010 Santa Monica Blvd. – 51 units
Weingart Center
11010 smB

11010 smB
Google Earth

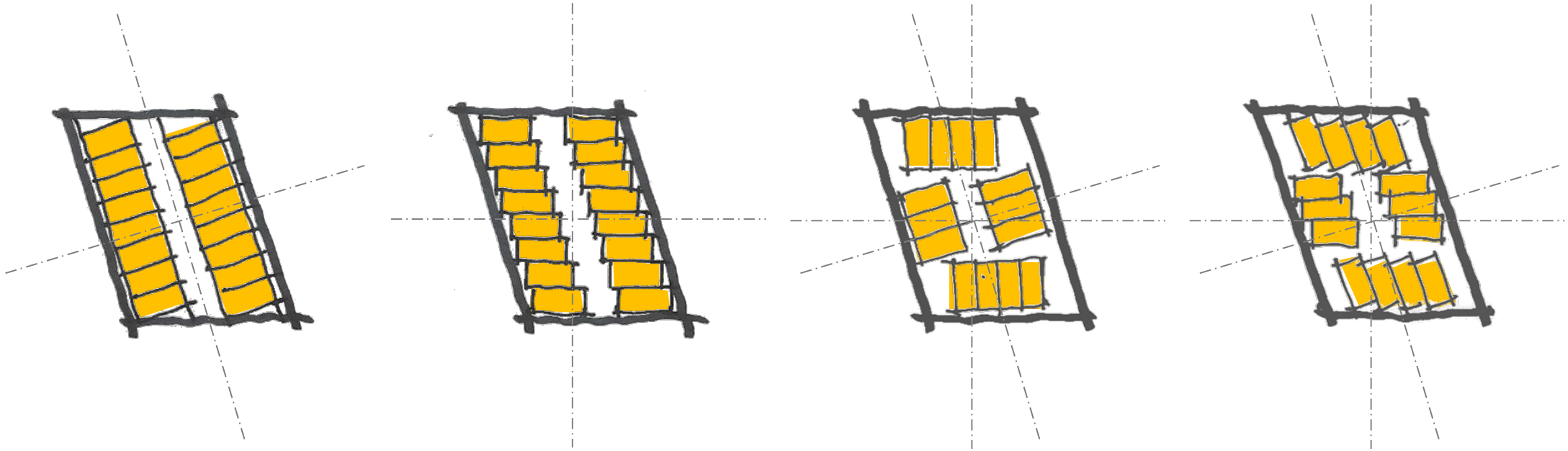

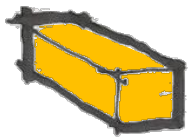

Studio as Building Block

(APPROX 12' X 26')

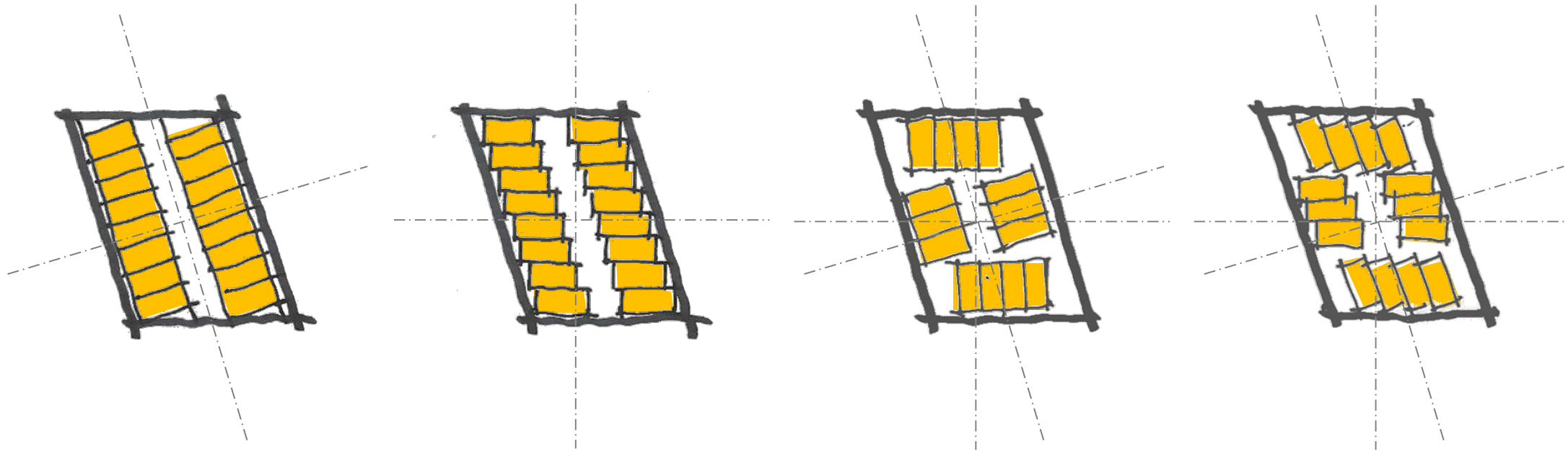

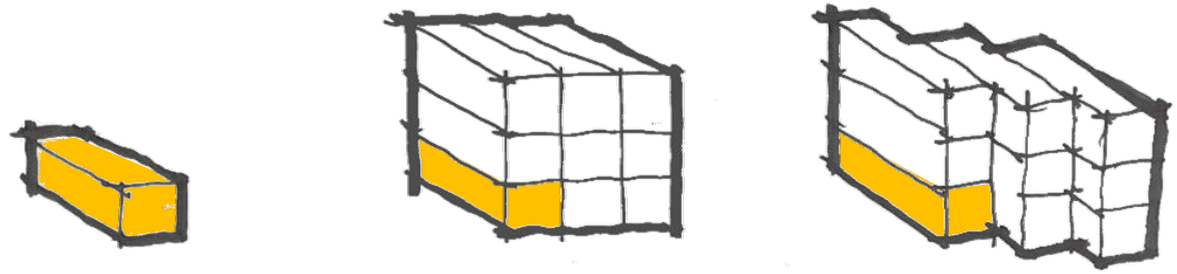

▲ The Sawyer, 3636 McKinney Ave., Dallas, photographed on Feb. 9, 2019. PHOTOGRAPHER: LAURA BUCKMAN FOR BLOOMBERG BUSINESSWEEK

Why America's New Apartment Buildings All Look the Same

Cheap stick framing has led to a proliferation of blocky, forgettable mid-rises—and more than a few construction fires.

By Justin Fox

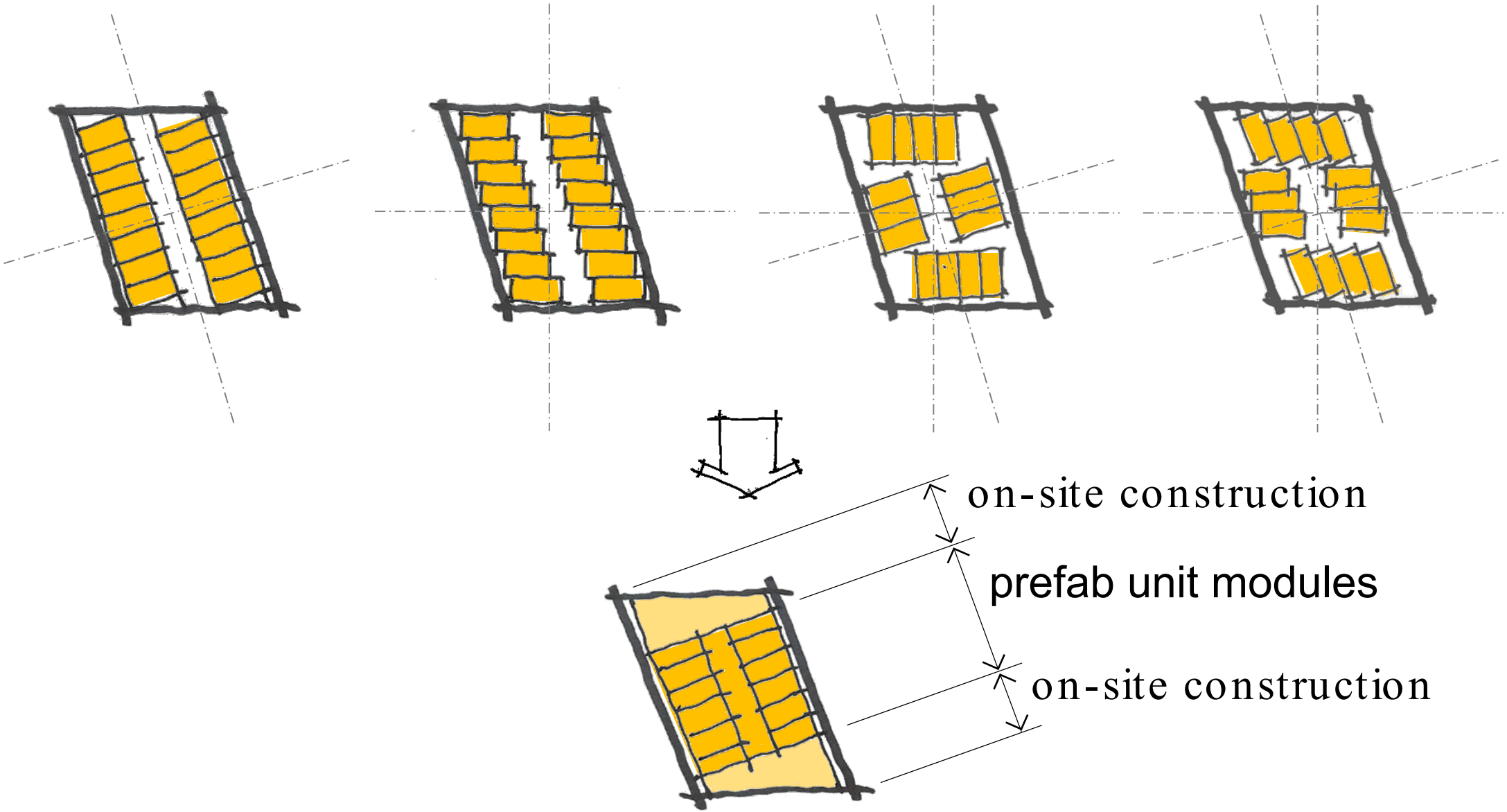
on-site construction
prefab unit modules
on-site construction

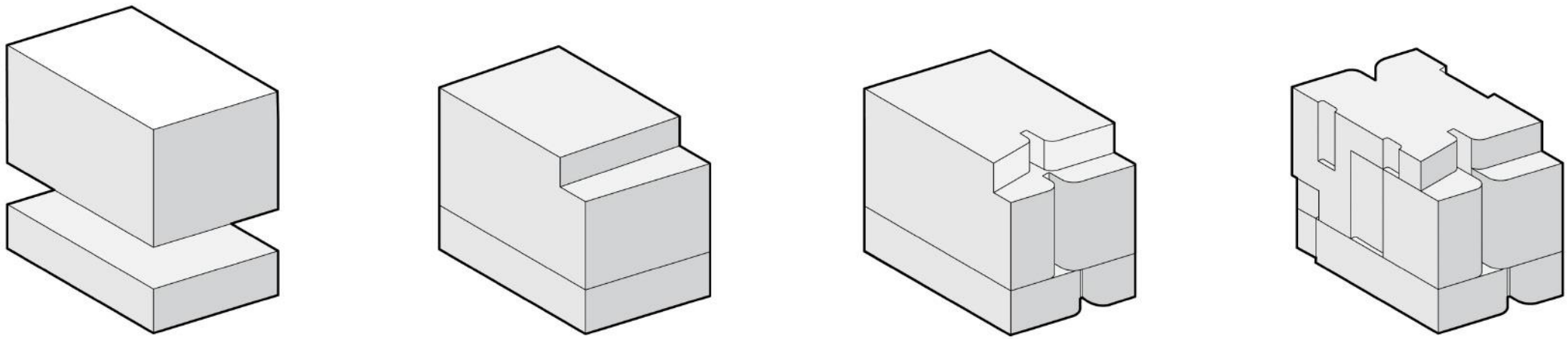

massing

building form expresses plaster finished stick built residences over a shot blasted concrete podium. santa monica blvd and alley side elevations are shaped to define entries, circulation and views outward.

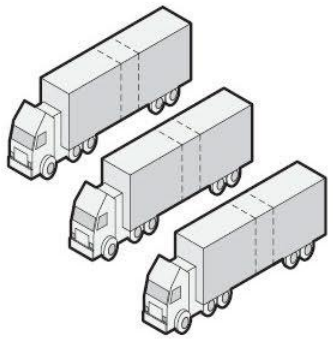

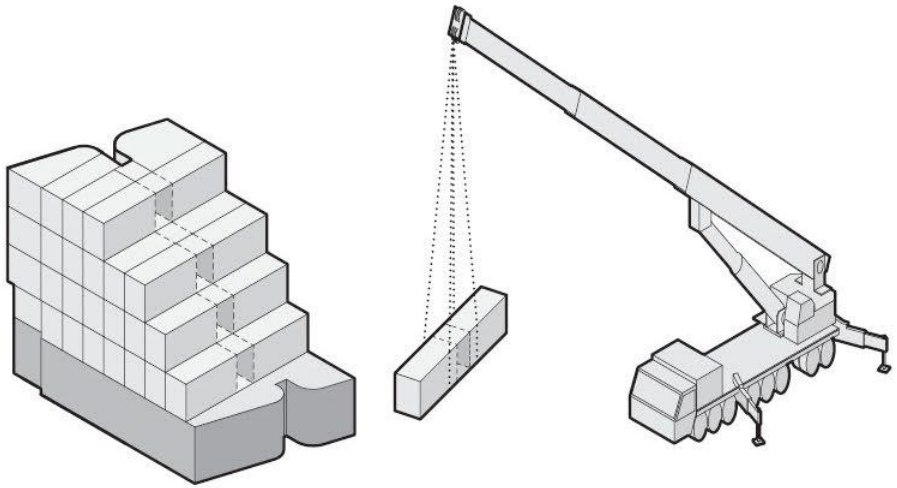

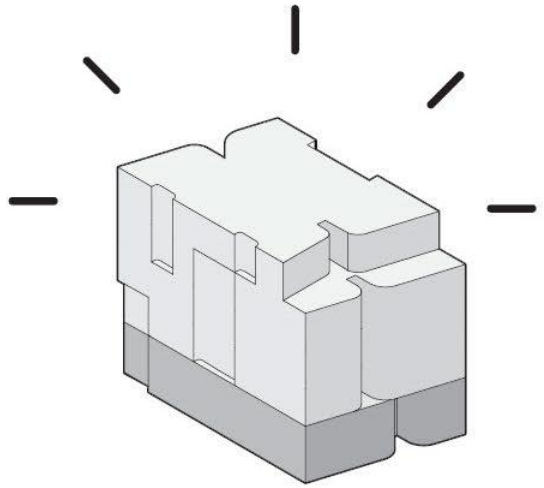

prefabrication

two studio units and the corridor (12’ wide x 70’ long) will be prefabricated as a single component and trucked from the factory 90 miles to the east. erection above the concrete podium will be completed within one week.

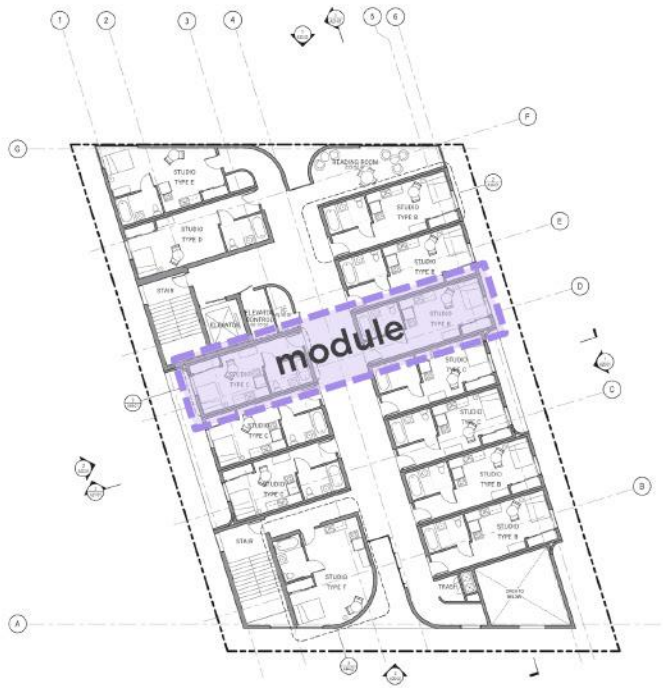

second floor
(sim at third and fourth)

fifth floor

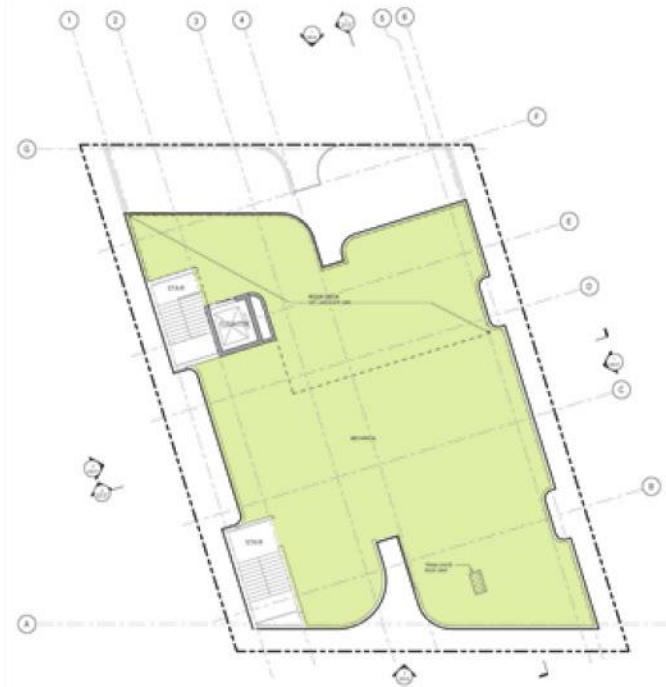

roof deck

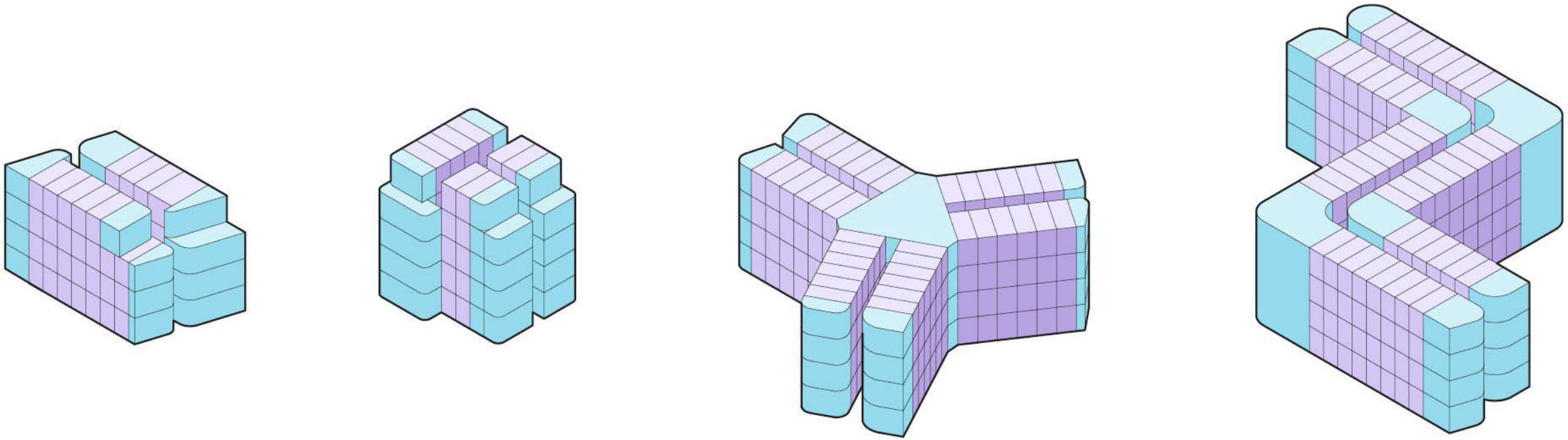

adaptability

prototyping the process not the design.
80/20 approach allows for site adaptability with approx. 80% of units being standard rectilinear modules and remaining being custom modules or site built.

11010 Santa Monica Blvd

7024 South Broadway

Mixed -Use Affordable Housing - 120 Units
Clifford Beers Housing

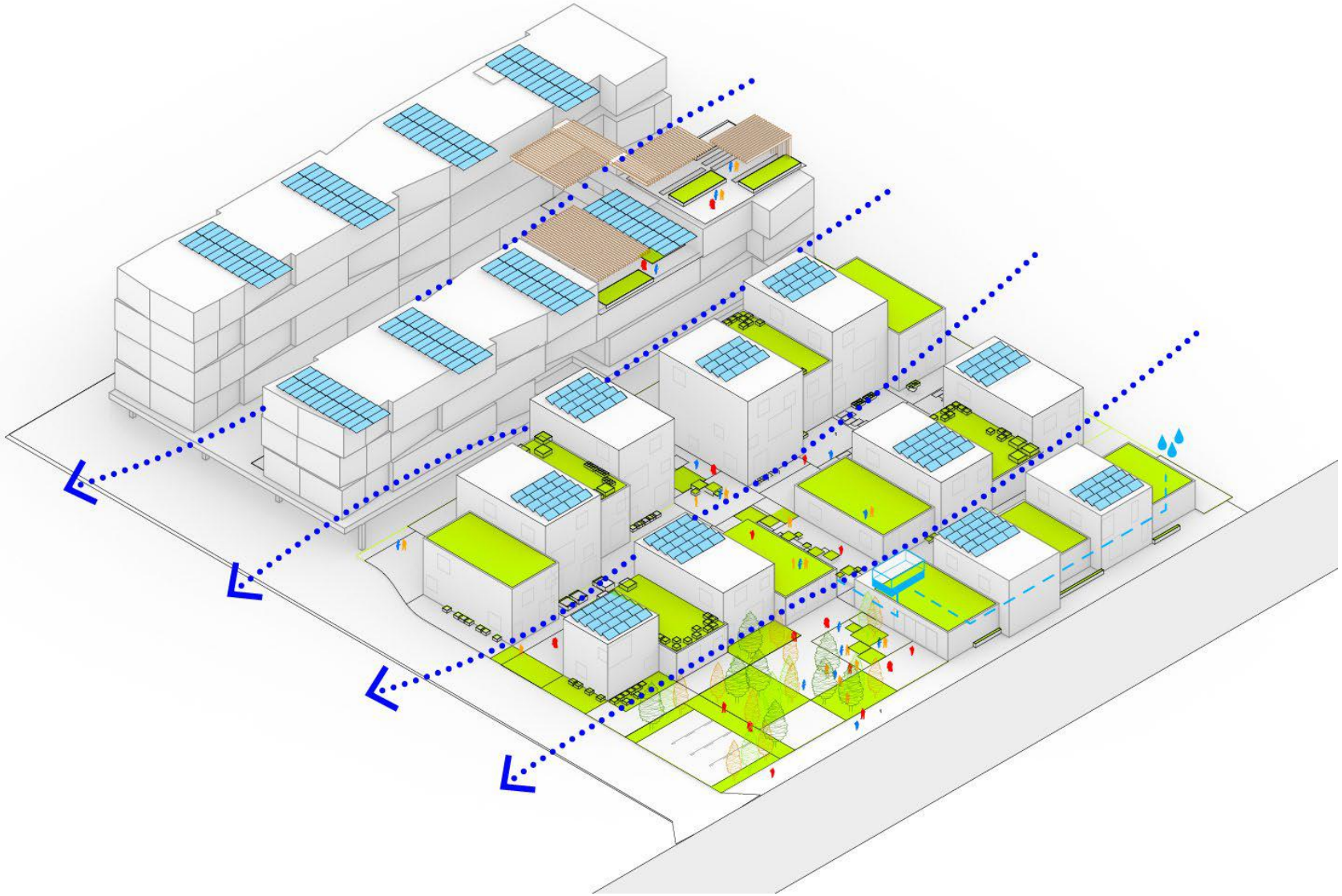

Corazón Del Valle - 180 Units
Clifford Beers Housing

Where’s the affordability?

Isn’t it a little too nice?

Everyone should have a beautiful place to live